LOCATION TABLE		
MCC CABINET	27	
BUCKET	2FAD	
TRIO CABINET		
TRIO BLOCK		CONTROL (1)
TRIO BLOCK		RUN (2)
RELAY CABINET		

NOTES:
- DENOTES TERMINALS IN TBX-2064-01
- DENOTES TERMINALS IN CONTROL PANEL
- RELAY CABINET
- TRIO TERMINAL

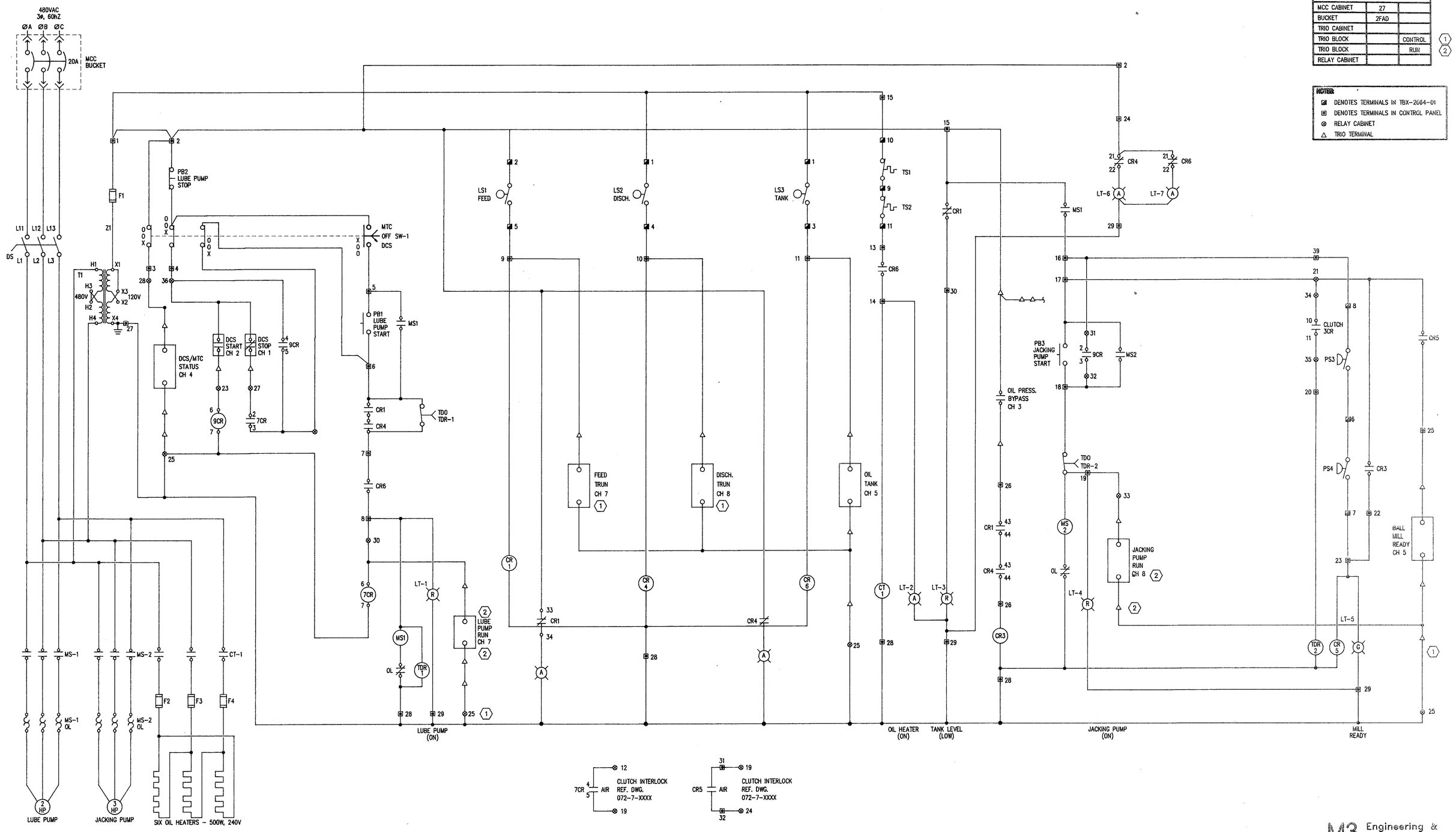

LUBE OIL SYSTEM ELEMENTARY DIAGRAM

M3 Engineering & Technology Corp.
Tucson, Arizona
Tel.(602)293-1488 Fax.(602)293-8349
M3-PN94203

REFERENCES		REFERENCES	
DWG. NO.	TITLE	DWG. NO.	TITLE

REVISIONS			
NO.	BY	DATE	DESCRIPTION

REQUISITIONS		
NO.	DATE	DESCRIPTION

MISCELLANEOUS		
NO.	DATE	DESCRIPTION

SCALE: NONE	DATE
DRAWN BY J.D.C.	JAN '95
TRACED BY	
CHECKED BY	
APPROVED BY	
ISSUED	

Morenci Inc.
MORENCI ENGINEERING DEPARTMENT
MORENCI, ARIZONA

METCALF CONCENTRATOR
GRINDING & CLASSIFYING
A7 BALL MILL
ELECTRICAL
480V ELEMENTARY DIAGRAM
LUBE OIL SYSTEM

JOB NO. MI-4113
DWG NO. 072-7-2056
ACCT. NO.
REV. NO.

7-2056.DWG LAST REV BY XX-XX-XX LAST UPDATE 01-25-95